Examples of Active Input Connections

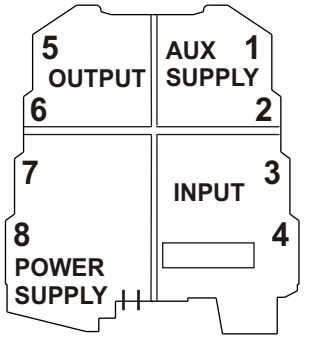

2 wires Connections
Active Current Input.

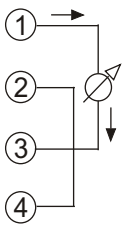

Active Input provided from a 4 wires sensor, supplied by the Auxiliary Power Supply.

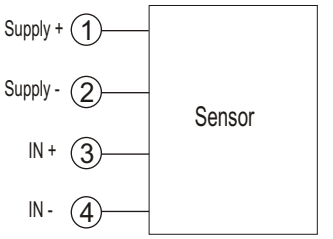

LED indications on the front

LED (Red)	Meaning
Fast Flashing	Internal fault
Slow Flashing	DIP-switch setting not allowed
Steady light	Input or output out-of-range limiter device triggered or input saturation.

Note: in case of internal fault, the output will stay at null value.

Disposal of Electrical & Electronic Equipment (Applicable throughout the European Union and other European countries with separate collection programs)
This symbol, found on your product or on its packaging, indicates that this product should not be treated as household waste when you wish to dispose of it. Instead, it should be handed over to an applicable collection point for the recycling of electrical and electronic equipment. By ensuring this product is disposed of correctly, you will help prevent potential negative consequences to the environment and human health, which could otherwise be caused by inappropriate disposal of this product. The recycling of materials will help to conserve natural resources. For more detailed information about the recycling of this product, please contact your local city office, waste disposal service or thè

This document is property of SENECA srl. Duplication and reprodution are forbidden, if not authorized. Contents of the present documentation refers to products and technologies described in it. All technical data contained in the document may be modified without prior notice Content of this documentation is subject to periodical revision.

CSQ IQNet ISO9001-2000

Brought to you by **SENECA**UK
PO Box 1 - Ilkley - West Yorkshire - LS29 8EU
Tel: 01943 816796 - Fax: 01943 816796
Web: www.SenecaUK.com - Email: sales@SenecaUK.com

EN

K109S

V - mA CONVERTER WITH 4-POINT GALVANIC INSULATION AND AUXILIARY SUPPLY

General Description

The K109S instrument is a V - mA converter with 4-point galvanic insulation designed for industrial standard voltage or current signals with passive input, active output and auxiliary supply.
Analog/digital conversion takes place at 14 bit on every input range.
The instrument also provides the following functions:

- Auxiliary Supply, completely floating, isolated from the other ports, with voltage unrelated to the input power supply.
- Current or voltage input.
- Programmable rejection for 50 or 60 Hz mains frequency.
- Additional reading stabilisation filter.
- Inversion of the input and inverted output scales
- Input Out-of-Range programmable to 2.5% or 5.0%
- SQRT function.
- Linearisation for horizontal cylindrical tanks.

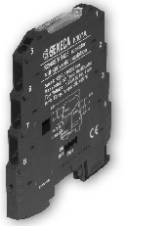

The module is also characterised by its extremely compact size, coupling to 35 mm DIN rail, power supply available by bus, quick fit couplings by spring-type terminals, onsite configuration by DIP-switch.

Technical Features

Power Supply : Consumtion : Dissipation :	19,2..30 Vdc -max 23 mA at 24 Vdc (with output at 20 mA and auxiliary supply not used) -max 45 mA at 24 Vdc (with output at 21 mA and auxiliary supply at 21 mA) < 500 mW.
Voltage Input : Current Input: Permissible max. Input Out-of-Range:	0..10 V, 2..10 V, 0..5 V, 1..5 V, Input Impedance : 110 kΩ 0..20 mA, 4..20 mA, Input Impedance : 35 Ω ± 2,5 o ± 5% depending on settings (see section Inputs-Outputs Limits)
Voltage Output : Current Output : Permissible max. Output Out-of-Range : Current output protection :	0..5 Vdc, 1..5 Vdc, 0..10 Vdc e 2..10 Vdc Minima load resistance di carico 2 KΩ 0..20 mA, 4..20 mA, 20..0 mA, 20..4 mA Maximum load resistance 500 Ω Fixed (see section *Input-Output Limits*) approximately 25 mA
Auxiliary Supply:	Voltage: 17..21 Vdc Current: 0..25 mA.
Processing : ADC :	Digital, 32 bit floating-point calculation 14 bit on every input range

10-90% response :	50 Hz : max 41 ms without filter and 88 ms with filter; 60 Hz : max 35 ms without filter and 74 ms with filter.
Transmission :	Digital Optical
Max. transmission error [1] :	0.08% of the f.s. value for mA or 5 V output 0.07% of the f.s. value for 10 V output
Resolution :	1 mV for voltage output, 2 μA for current output
Thermal drift :	Lower than 120 ppm/K
SQRT error [2] [3] :	in the range 1..100%: floating point 32 bit
Linearisation error Cylindrical tank [2] :	0,05%
Insulation Voltage :	1,5 KV between each group of ports
Protection Index :	IP20
Operating Conditions :	Temperature -20..+65 °C Humidity 10..90 % at 40°C (non-condensing) Altitudine 2000 slm
Storage Temperature :	-40..+85 °C
LED Signalling :	Input or output out-of-range limiter device triggered or input saturation. Internal fault. Wrong DIP-switches settings.
Connections :	
Conductor Section :	Spring terminals
Wire stripping :	0,2..2,5 mm^2
Box :	PBT (black colour)
Dimensions, Weight :	6,2 x 93,1 x 102,5 mm, 46 g.
Standards :	EN61000-6-4/2002 (electromagnetic emission, industrial surroundings) EN61000-6-2/2005 (electromagnetic immunity, industrial surroundings) EN61010-1/2001 (safety) All the circuits must be provided with double insulation from the circuits under dangerous voltage. The power supply transformer must be built to compliance with EN60742: “Insulation transformers and Safety transformers”.

[1] No linearisation function enabled.

[2] Linearisation functions operate only in the 0..100% rated range, whereas for the under-range and the over-range, the input signal is transferred without any alteration (G=1). Continuity and monotonic quality of transfer are guaranteed throughout the entire range of measurement.

[3] In the 0..1% range, the function is linear with gain G=10 in order to avoid over-amplification of the noise.

Input and Auxiliary Power Supply

Input

The module accepts a current or voltage input signal.
The use of shield cables is recommended for the electronic connections.

Voltage input

Terminal 3: Voltage input.
Terminal 4: Return (GND).

Current input

Terminal 3: Current input.
Terminal 4: Return (GND)

Auxiliary Power Supply

The value of the provided voltage is indipendent from the one supplyed through 7 and 8 terminals.

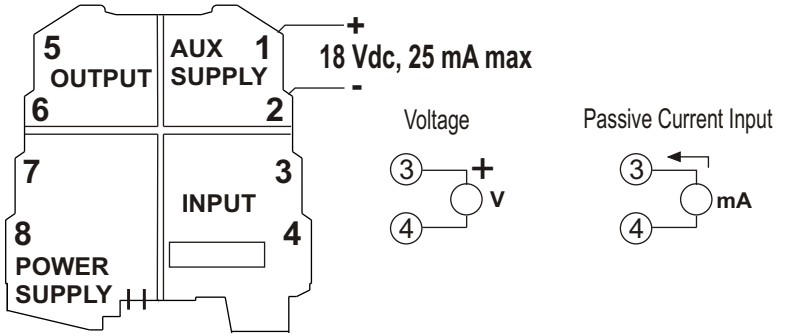

Output

Voltage connection - Current connection (applied current)

The use of shield cables is recommended for the electronic connections.

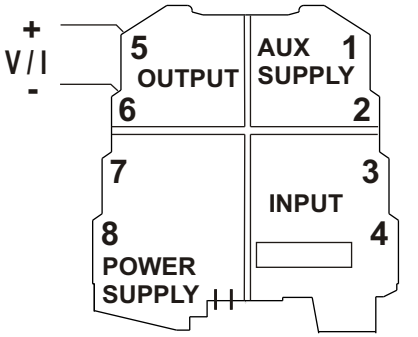

Note: in order to reduce the instrument's dissipation, we recommend either using the output for voltage or guaranteeing a load of > 250 Ω to the current output.

Electrical Connections

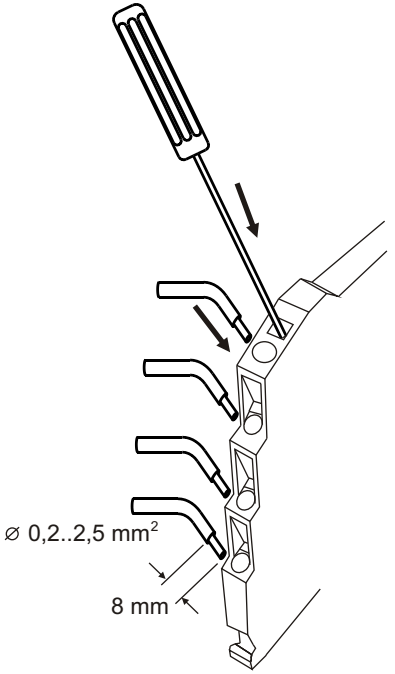

The module has been designed for spring-type terminal electrical connections.
Proceed as follows to make the connections:

1 - Strip the cables by 0.8 mm
2 - Insert a screwdriver in the square hole and press it until the cable lock spring opens.
3 - Insert the cable in the round hole.
4 - Remove the screwdriver and make sure that the cable is tightly fastened in the terminal.

Power supply

There are various ways to provide the K Series modules with power.

1 - Direct power supply to the modules by connecting 24 Vdc power supply directly to Terminals 7 (+) and 8 (-) of each module.

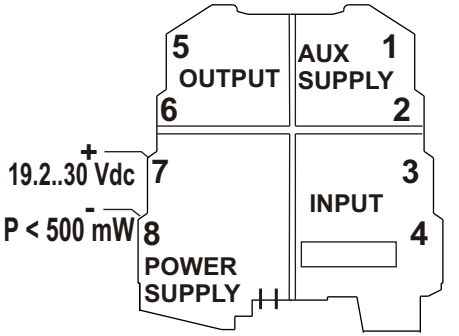

2 - Using the K-BUS connector accessory for the distribution of the power supply to the modules via bus connector, in this way eliminating the need to connect power supply to each module.
The bus can be supplied from any of the modules; the total absorption of the bus must be less than 400 mA. Higher absorption values can damage the module. An appropriately sized fuse must be connected in series to the power supply.

3 - Using the K-BUS connector accessory for the distribution of the power supply to the modules via bus connector and the K-SUPPLY accessory for the connection of the power supply.
The K-SUPPLY accessory is a 6.2 mm wide module that contains a set of protections designed to protect the modules connected via bus against over-voltage loads.
The bus connector can be provided with power using the K-SUPPLY module if the total absorption of the bus is less than 1.5 A. Higher absorption values can damage both the module and the bus. An appropriately sized fuse must be connected in series to the power supply.

Installation rules

This module has been designed for assembly on a DIN 46277 rail. Assembly in vertical position is recommended in order to increase the module's ventilation, and no raceways or other objects that compromise aeration must be positioned in the vicinity.
Do not position the module above equipment that generates heat; we recommend positioning the module in the lower part of the control panel or container compartment.
We recommend rail-type assembly using the corresponding bus connector (Code K-BUS) that eliminates the need to connect the power supply to each module.

Inserting the module in the rail

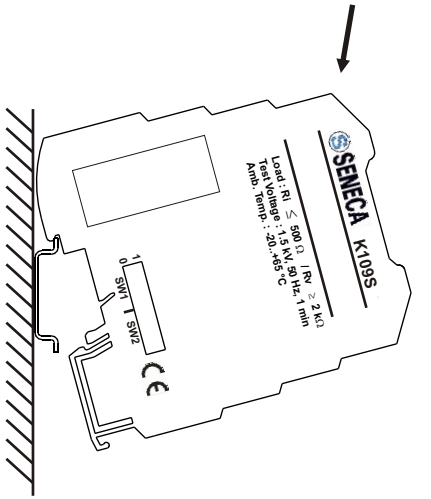

1 - Attach the module in the upper part of the rail.
2 - Press the module downwards.

Removing the module from the rail

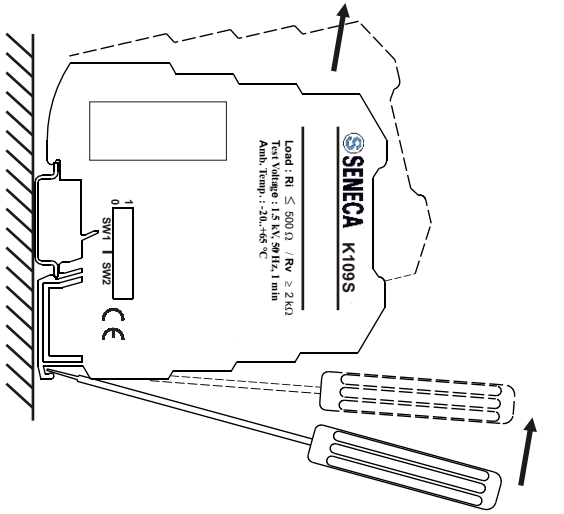

1 - Apply leverage using a screwdriver (as shown in the figure).
2 - Rotate the module upwards.

Using the K-BUS connector

1 - Compose the K-BUS connectors as required in order to obtain the number of positions necessary (each K-BUS permits the insertion of no. 2 modules).
2 - Insert the K-BUS connectors in the rail by positioning them on the upper side of the rail and then rotating them downwards.
IMPORTANT: Pay particular attention to the position of the protrudent terminals of the K-BUS. The K-bus must be inserted in the guide with the protrudent terminals on the left (as shown in the figure) otherwise the modules are turned upside downs.

- Never connect the power supply directly to the bus connector on the DIN rail.
- Never tap power supply from the bus connector either directly or by using the module's terminals.

SETTING OF THE DIP-SWITCHES

Factory setting

All the module DIP switches are at pos. 0 as defaut configuration.
This set correspond to the following configuration :

Input signal	→	0..20 mA
50-60 Hz mains frequency rejection	→	50 Hz
Input filter	→	Present
Inversion	→	No
Linearisation	→	None
Output signal	→	0..20 mA
Input Out-of-range	→	± 5% limit

It is understood that this configuration is valid only with all the DIP switches at position 0. Even as one Dip is moved, it is necessary to set all the other parameter as indicated on the following tables.

Note: for all following tables
The indication ● indicates that the DIP-switch is set in Position 1 (ON).
No indication is provided when the DIP-switch is set in Position 0 (OFF).

INPUT SIGNAL				
SW1	1	2	3	
				0..20 mA
	●			4..20 mA
		●		0..10 Vdc
	●	●		2..10 Vdc
			●	1..5 Vdc
	●		●	0..5 Vdc
		●	●	Not allowed
	●	●	●	Not allowed

50-60 Hz MAINS FREQUENCY REJECTION		
SW1	4	
	●	60 Hz
		50 Hz

INPUT FILTER (*)		
SW1	5	
	●	Present
		Absent

(*) The filter increases the rejection to the mains frequency disturbance, and stabilizes the reading reducing the measure noise. It is advised to hold it always inserted, but that the maximum speed of answer is not demanded.

INVERSION		
SW1	6	
	●	Present
		Absent

FUNCTION			
SW1	7	8	
			Default
	●		None
		●	SQRT
	●	●	Tank

OUTPUT SIGNAL				
SW2	1	2	3	
				0..20 mA
	●			4..20 mA
		●		20..0 mA (5)
	●	●		20..4 mA (5)
			●	0..10 Vdc
	●		●	0..5 Vdc
		●	●	1..5 Vdc
	●	●	●	2..10 Vdc

(5) These are inverse output ranges that are useful whenever the linearisation applied is incompatible with the inversion of the input.

INPUT OUT-OF-RANGE		
SW2	4	
	●	5%
		2.5%

Input Output Limits

The Out-of-Range Limits provided in the following table are applied to the input signal, whereas the fixed limits are applied to the output signal: 0..21 mA, 0..5,25 Vdc, 0..10,5 Vdc.

Rated value	Over Range ± 2,5 %	Over-Range ± 5 %
20 mA	20,5 mA	21 mA
4 mA	3,5 mA	3 mA
0 mA	0 mA	0 mA
10 Vdc	10,25 Vdc	10,5 Vdc
5 Vdc	5,125 Vdc	5,25 Vdc
1 Vdc	0,875 Vdc	0,75 Vdc
2 Vdc	1,75 Vdc	1,5 Vdc
0 Vdc	0 Vdc	0 Vdc